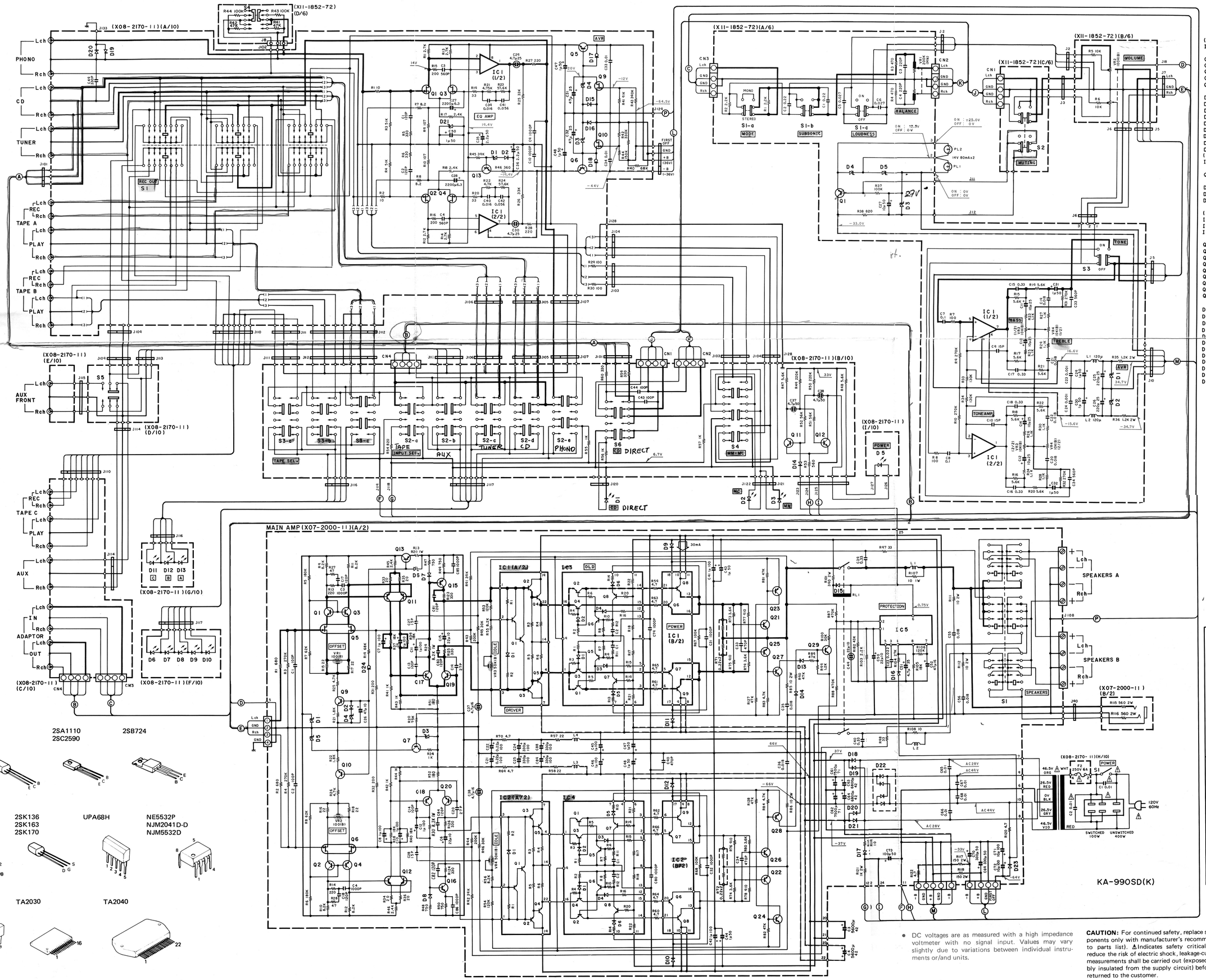

(X08-2170-00)

IC1	: NE55332P or NJM5532D
Q1~4	: 2SK170(BL,Y)
Q5	: 2SC2590(Q,R)
Q6	: 2SA1110(Q,R)
Q9,10	: 2SK163(M,N) or 2SK136(S)
Q11~13	: 2SC945(A)(Q,P) or 2SC2320(E,F)
D1	: RD5.1J(B2)
D2,15,16,19,20	: 1S2076 or 1S1555
D3,4	: RD20J(B2)
D5	: B30-0483-05
D6~10	: B30-1012-05
D11~13	: B30-1010-05
D14	: 1S2076A
D17,18	: E-272
D21	: RD12J(B2)

(X11-1850-00)

IC1	: NJM2041D-D
Q1	: 2SB724(P,O)
D1,2	: RD16E(B3)
D3	: RD27E(B2)
D4,5	: RD13E(B3)

(X07-2000-02)

IC1,2	: TA2040
IC3,4	: TA2030
IC5	: μPC1237H
Q1~4,9,10	: 2SC1845
Q5,6	: μPA68H(K,L)
Q7,17~20	: 2SC2632(Q,R,S)
Q11,12	: 2SA1349
Q13,15,16	: 2SA1124(Q,R,S)
Q21,22	: 2SC2320
Q23~26	: 2SA999
Q27,28	: 2SC2631(Q,R,S)
Q29	: 2SA988
D1,5	: RD22J(B2)
D2,7,8	: 1S2076
D3	: RD10E(B3)
D4	: RD5.6J(B1)
D6	: RD16E(B3)
D9~12	: RU4Z
D13~16	: 1S2076A
D17	: DSM1A1
D18~21	: S3V20
D22	: M4C-52-12*1 or M4C-51-12*1
D23	: V06C
D24	: E-102

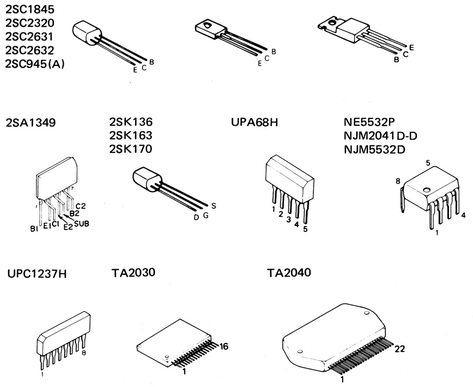

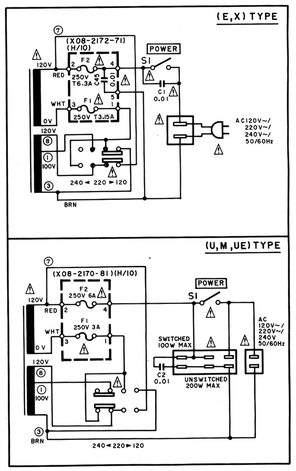

- DC voltages are as measured with a high impedance voltmeter with no signal input. Values may vary slightly due to variations between individual instruments or/and units.

CAUTION: For continued safety, replace safety critical components only with manufacturer's recommended parts (refer to parts list). ⚠Indicates safety critical components. To reduce the risk of electric shock, leakage-current or resistance measurements shall be carried out (exposed parts are acceptably insulated from the supply circuit) before the appliance is returned to the customer.

KA-990SD

KENWOOD